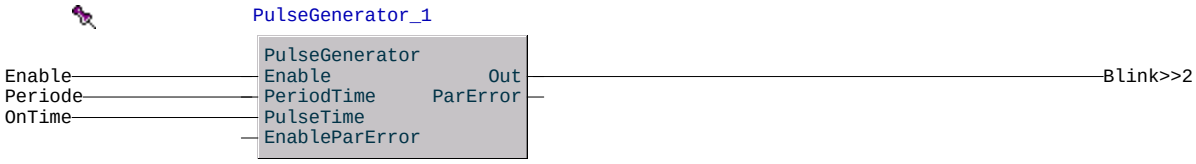
PulseGenerator_1
PulseGenerator
Enable
PeriodTime
PulseTime
EnableParError
Out
ParError
Enable
Periode
OnTime
Blink>>2

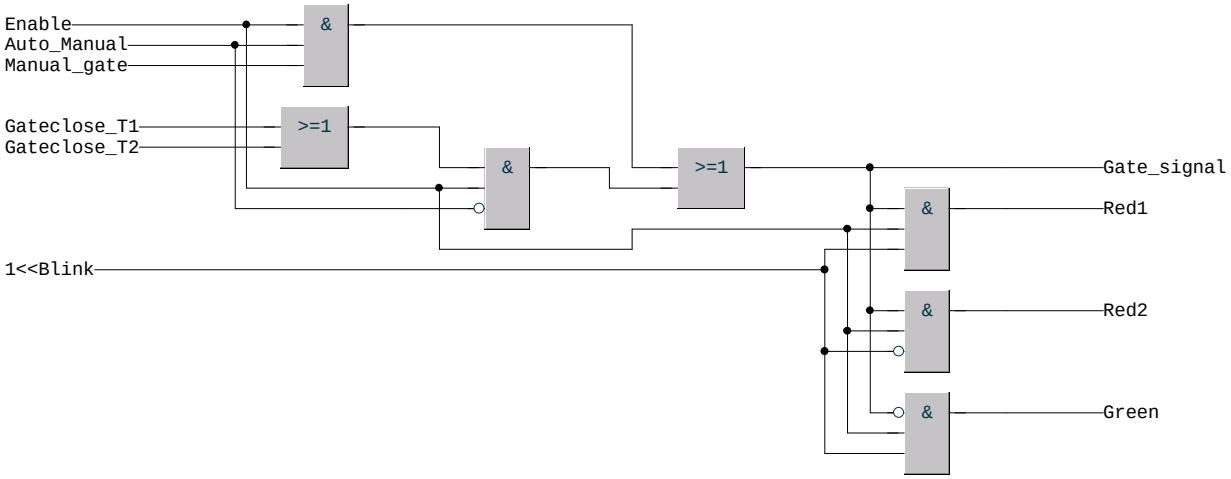
Enable
Auto_Manual
Manual_gate
Gateclose_T1
Gateclose_T2
1<<Blink
&
>=1
&
>=1
&
&
&
Gate_signal
Red1
Red2
Green